SUBMITTAL DATA SHEET

AUX R32 - The Free Match Inverter Series - AFEB24HP230V1FL

Job Name _____ Location _____ Date _____

Purchaser _____ Engineer _____

For ☐ Reference ☐ Approval ☐ Construction

Submitted to _____ Schedule # _____

Unit Designation _____



AFEB24HP230V1FL

- Fresh air intake
- Low noise
- Filter
- Anti-condensation
- Two-way drainage
- Easy to disassemble

Ceiling & Floor Indoor Unit			
Indoor Unit			**AFEB24HP230V1FL**
Capacity	Cooling	Btu/h	24000
	Heating	Btu/h	24000
Electrical	Power Supply	V~, Hz, Ph	208~230,60,1
	Input Current	A	0.5
Indoor Unit	Air Flow Rate (Tu/Hi/Mi/Lo)	CFM	824/765/600/494
	Sound Pressure Level	dB(A)	44
	Net Dimensions (W×D×H)	inch	50.39×27.17×9.25
		mm	1280×690×235
	Package Dimensions (Panel)	inch	53.54×30.32×12.80
		mm	1360×770×325
	Net / Gross Weight (Body)	lbs	71.7/83.8
Piping	Liquid Side	in. [mm]	1/4 [6.35]
	Gas Side	in. [mm]	5/8 [15.88]

Remarks:

1. All specifications are subject to change by the manufacturer without prior notice.
2. All units are being tested and comply to AHRI 210/240-2024. Indoor-unit capacities are nominal; system ratings depend on the matched outdoor unit.
3. Sound pressure levels are measured in anechoic chamber. During actual operation, sound pressure level will be higher as a result of room specification condition.
4. Data from AUX lab, 08/03/24. Data may change according to test surroundings; AUX reserves right of explanation on data.

Specifications are subject to change without notice.
 © 2026 Aux Cloud Commerce (USA) Inc. All rights reserved

Dimensions

Indoor Unit
AFEB24HP230V1FL

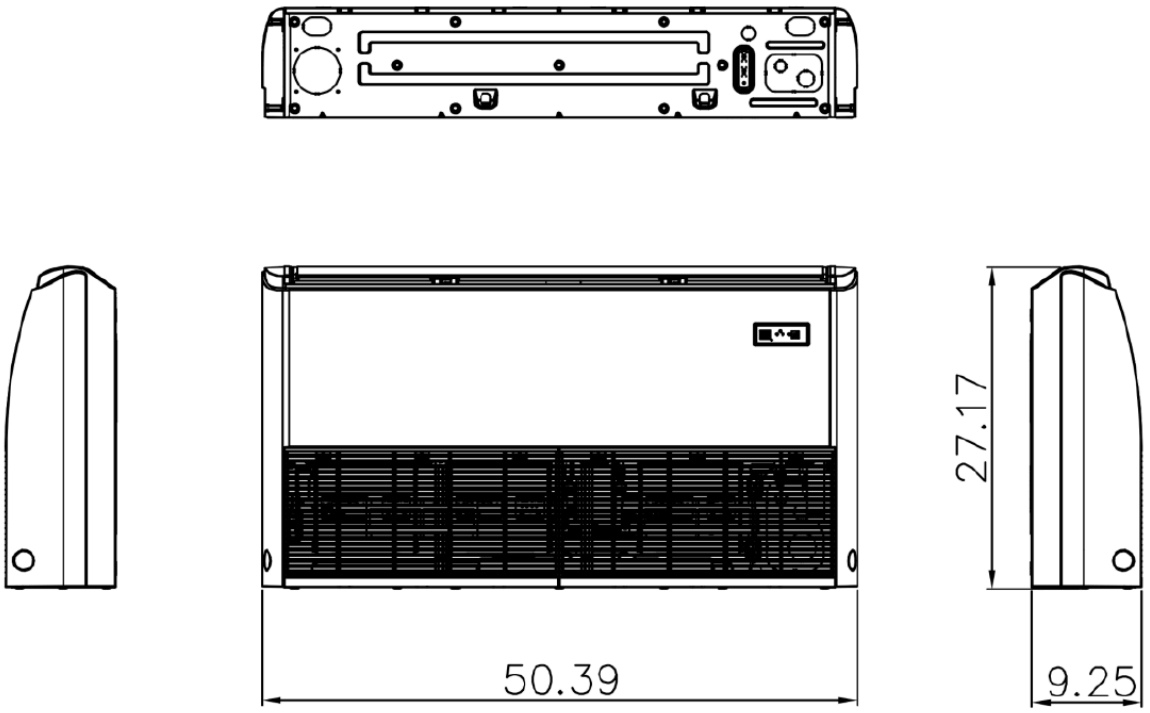

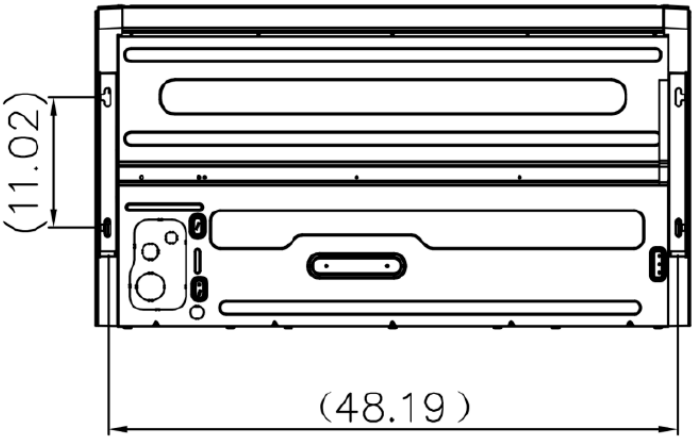

 © 2026 Aux Cloud Commerce (USA) Inc. All rights reserved